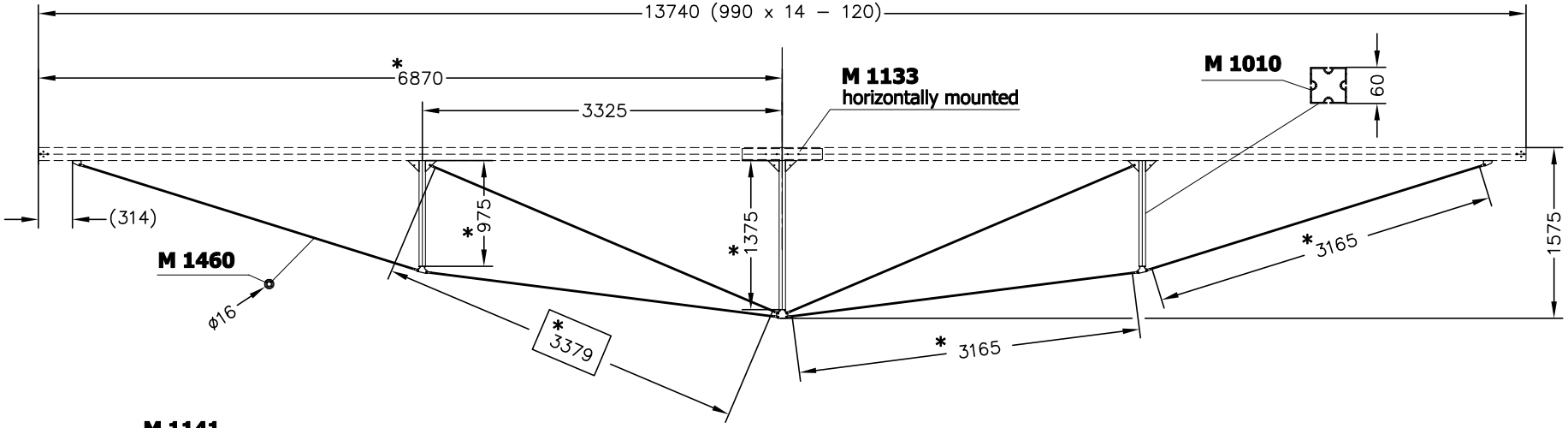

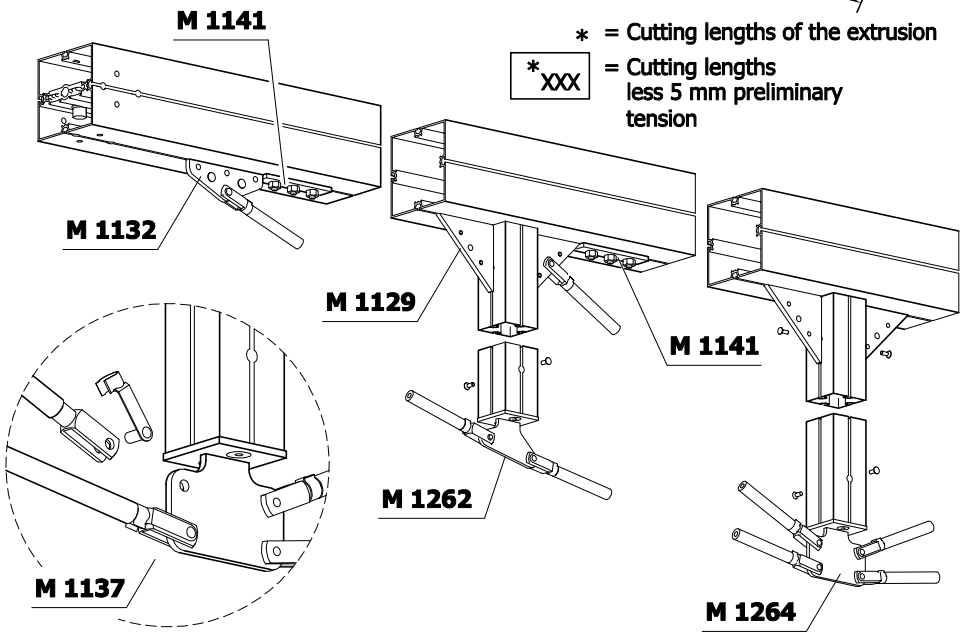

* = Cutting lengths of the extrusion

*XXX = Cutting lengths less 5 mm preliminary tension

Parts list for tie rod tensioning set M 734

Quantity	Art.-No:	Length:	Description:
2	M 1010	975	Square extrusion drilled for adaptor on both sides , rotated 90°
1	M 1010	1375	Square extrusion drilled for adaptor on both sides , rotated 90°
3	M 1100		Tension lock adaptor mounted
3	M 1555		Adaptor (without tension lock) mounted
4	M 1460	3165	Round tube with M 1137 mounted on both sides
2	M 1460	3379	Round tube with M 1137 mounted on both sides
6	M 1129		Angle reinforcement
1	M 1264		Tension brace junction node with 4 drillings
2	M 1262		Tension brace junction node with 2 drillings, bevelled
4	M 1141		Anti-slipping device
2	M 1132		Connector part

Attention : Truss systems differing from the standard ones must be recalculated by a structural engineer

TIM-34.6 EW 2913-00 27.11.06/WG, geä: 24.01.08/HB 01/2008 shift

© OCTANORM Vertriebs GmbH für Bauelemente. Errors and technical modifications reserved.