drilling inside

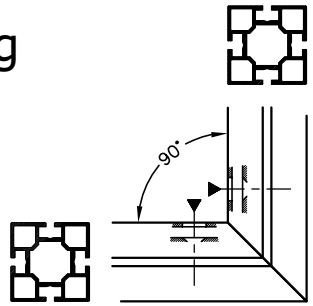

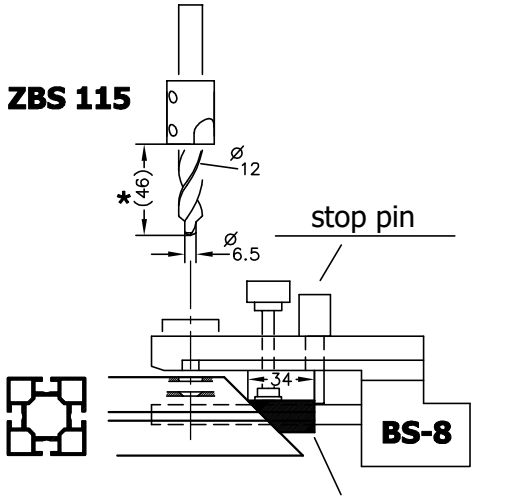

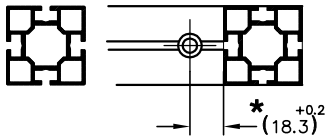

*Drill test hole and check tightening

Z 964

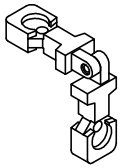

!

E 111/20

drilling outside

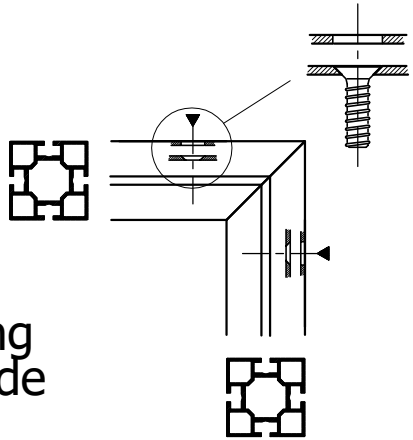

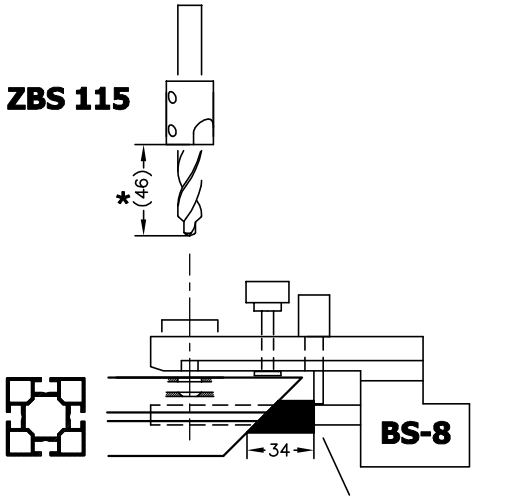

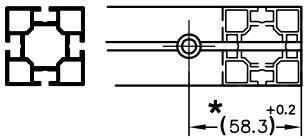

*Drill test hole and check tightening

TIM-56.0A EW 3129-00 22.04.08/HB 05/2008 shift

© OCTANORM Vertriebs GmbH für Bauelemente. Errors and technical modifications reserved.