Drilling dimensions for S 1151:

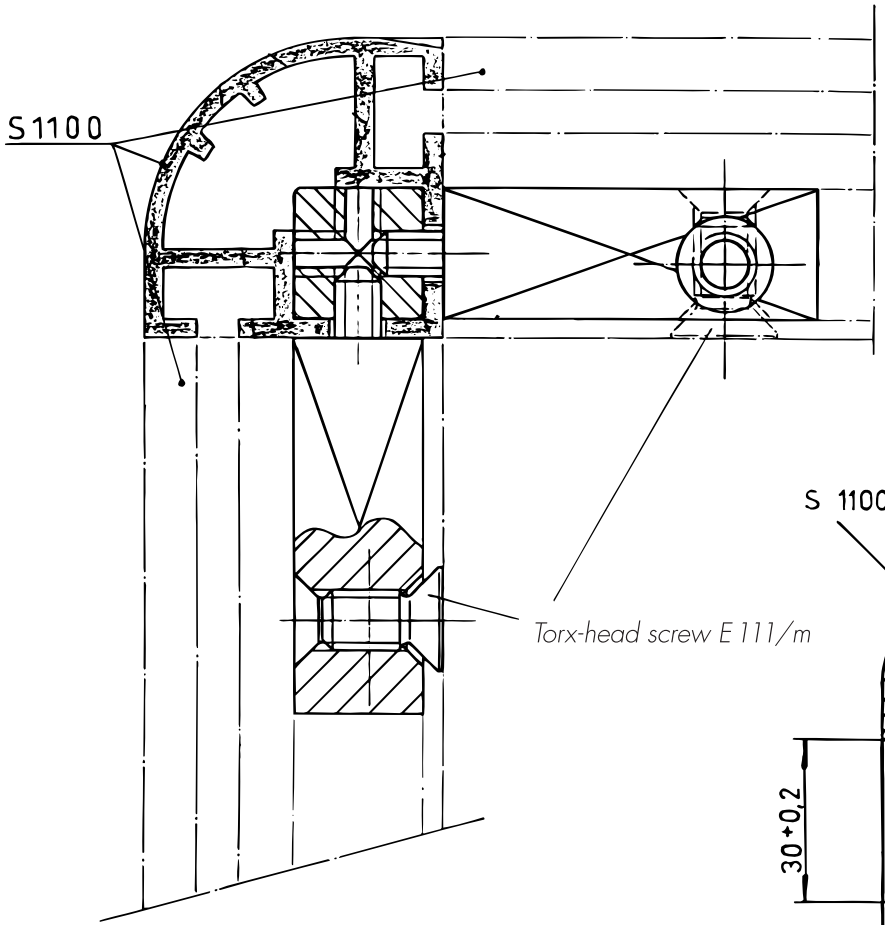

Mounting Instructions:

1. *Insert rear nut in extrusion S 1100*
2. *Screw connector to rear nut until the threaded drilling is in the right position.*
3. *Mount counterpart, fit in torx-head screw till ist sticks tight!*

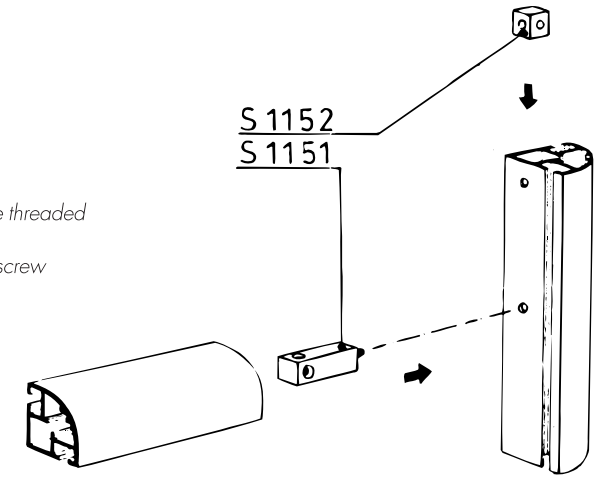

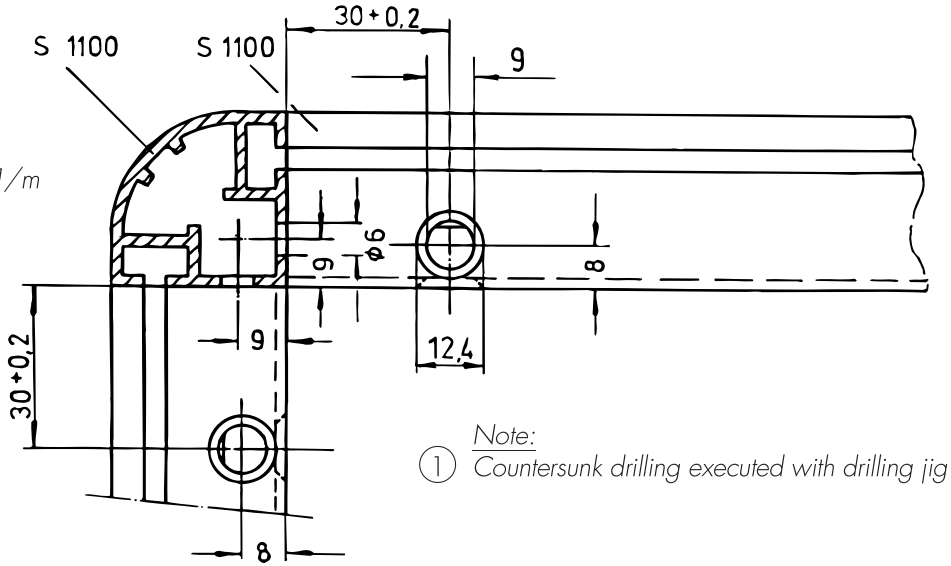

Note:

1. *Countersunk drilling executed with drilling jig for S 1100* ▶ BS 3

© OCTANORM Vertriebs GmbH für Bauelemente. Errors and technical modifications reserved.