A

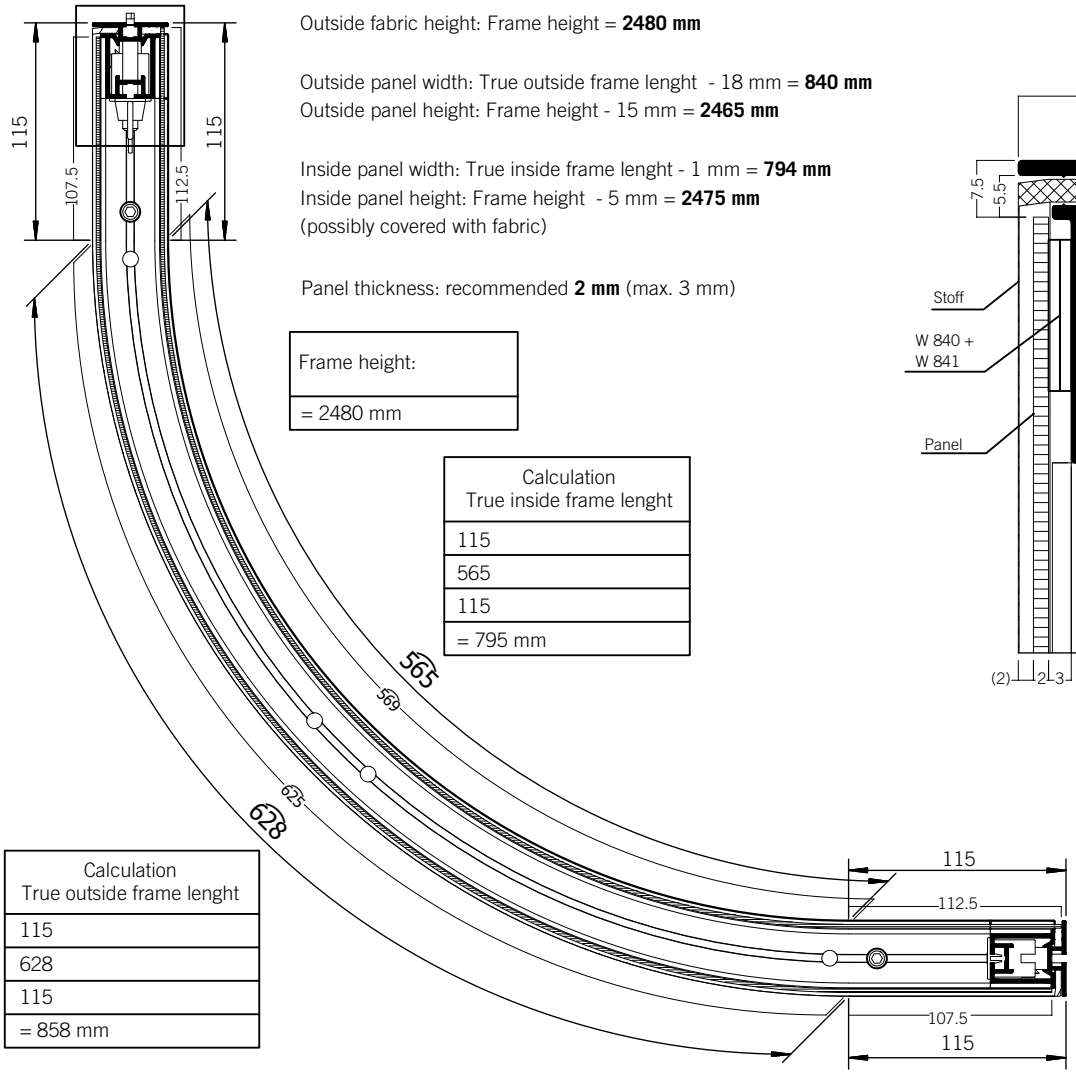

Information Panel

Outside fabric width: True outside frame lenght = **858 mm**
Outside fabric height: Frame height = **2480 mm**

Outside panel width: True outside frame lenght - 18 mm = **840 mm**
Outside panel height: Frame height - 15 mm = **2465 mm**

Inside panel width: True inside frame lenght - 1 mm = **794 mm**
Inside panel height: Frame height - 5 mm = **2475 mm**
(possibly covered with fabric)

Panel thickness: recommended **2 mm** (max. 3 mm)

Frame height:
= 2480 mm

Calculation True inside frame lenght
115
565
115
= 795 mm

Calculation True outside frame lenght
115
628
115
= 858 mm

All dimensions in mm!
The drawing with dimensions remains valid!

A (1:1)

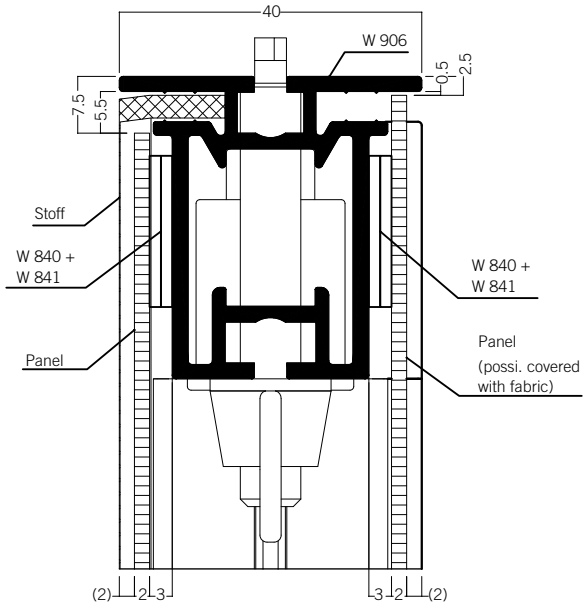

Detail positioning of loop tape

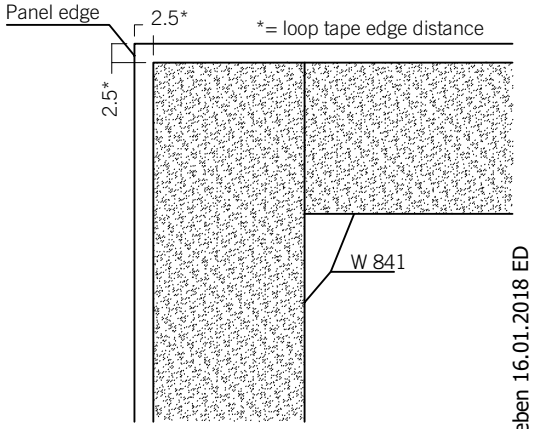

View panel back

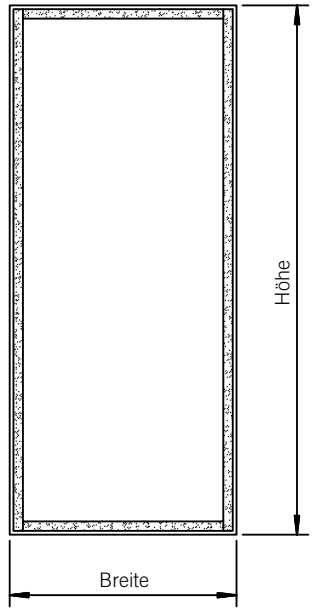

TI-OW_21.0 E-000577-0405A-T00 A Freigegeben 16.01.2018 ED

© OCTANORM Vertriebs GmbH für Bauelemente. Errors and technical modifications reserved.